QUICK GUIDE STARG8 AC

Ed. 01/2018
Rev. 01

1A

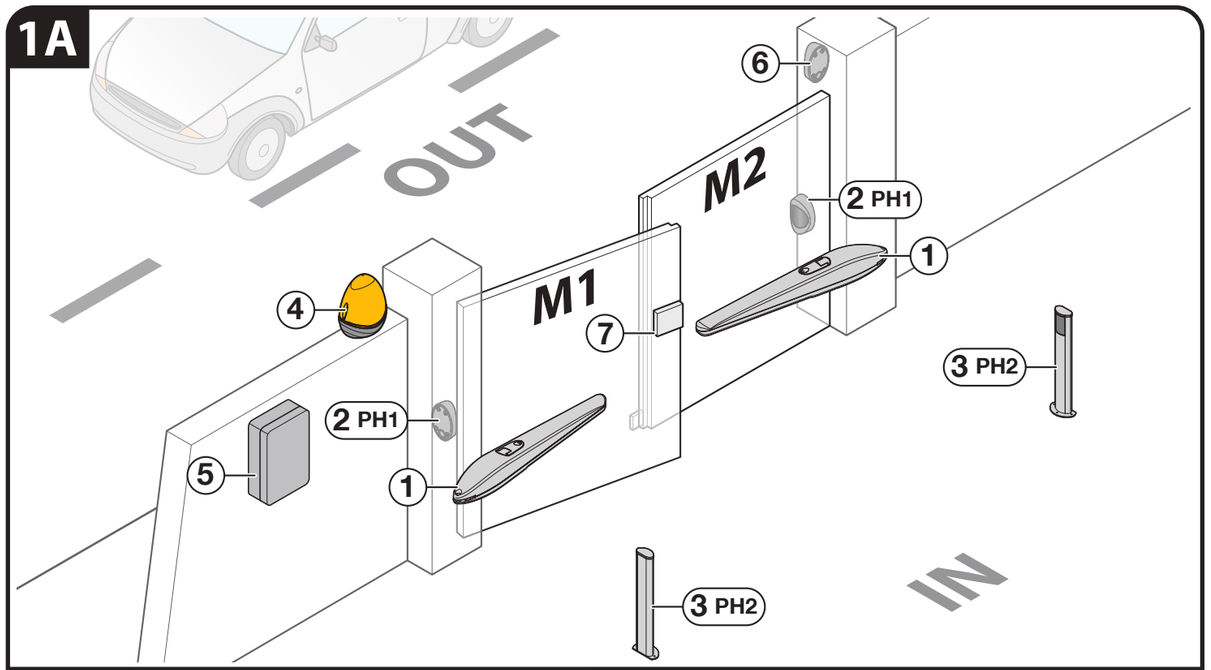

1B

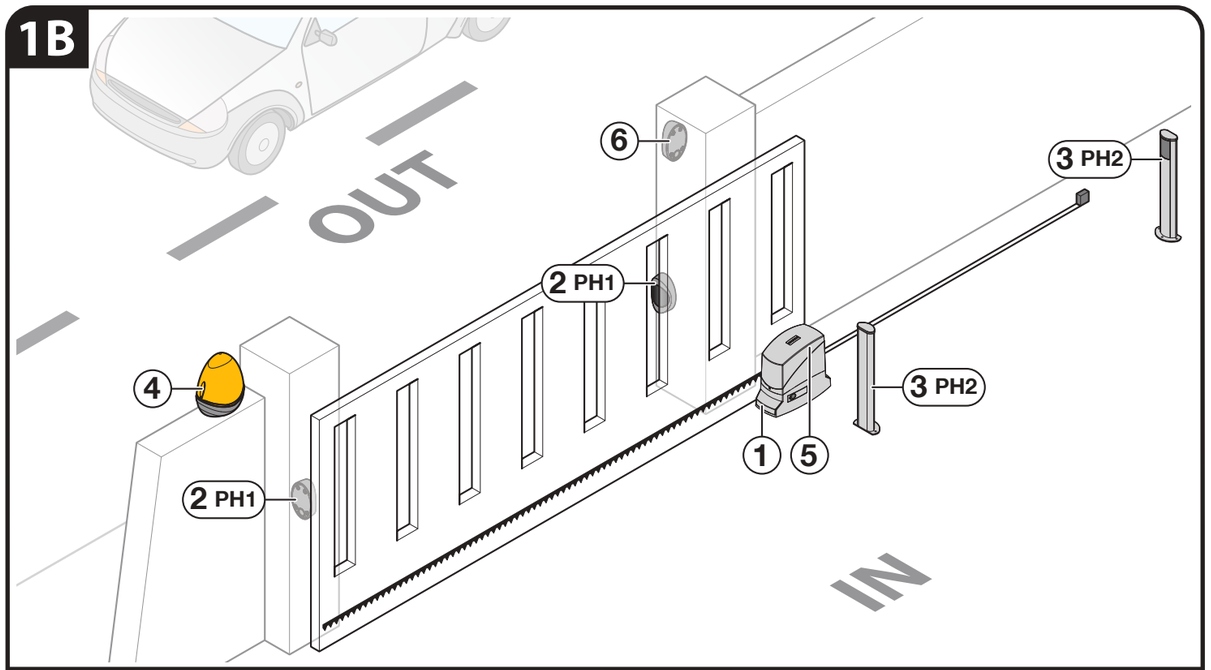

2A/1 Electromechanical motor

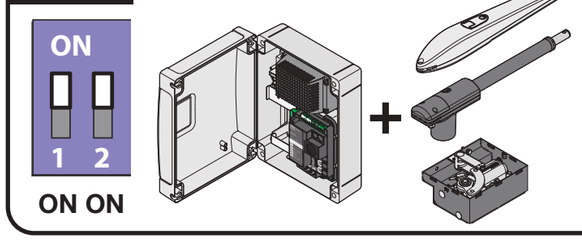

2A/2 Hydraulic motor

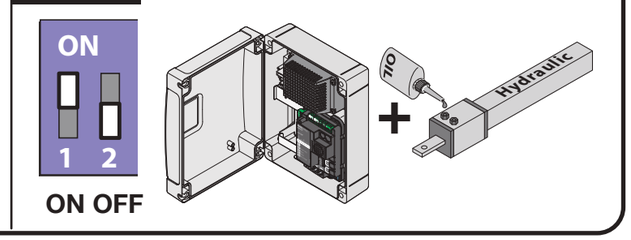

2B/1 Dynamos 230V

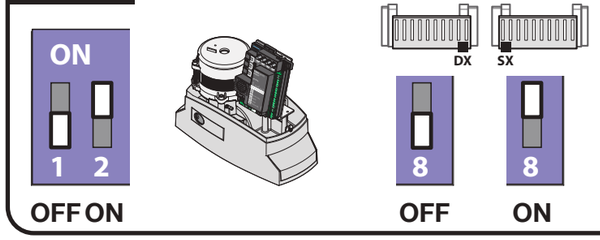

2B/2 Dynamos XL 2500

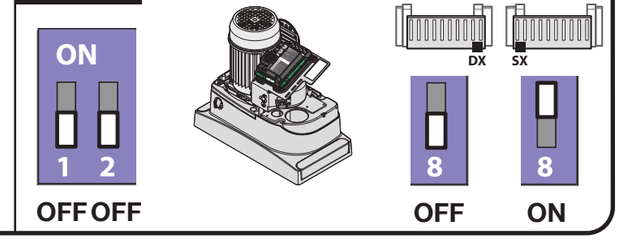

3

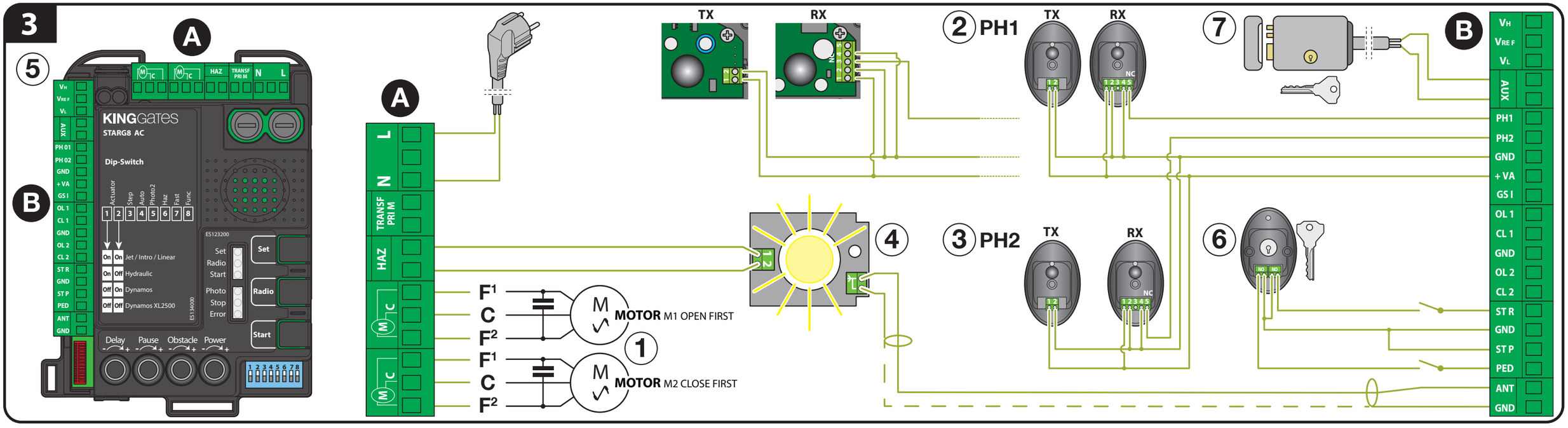

KINGGATES QUICK GUIDE STARG8 AC

Ed. 01/2018
Rev. 01

4A

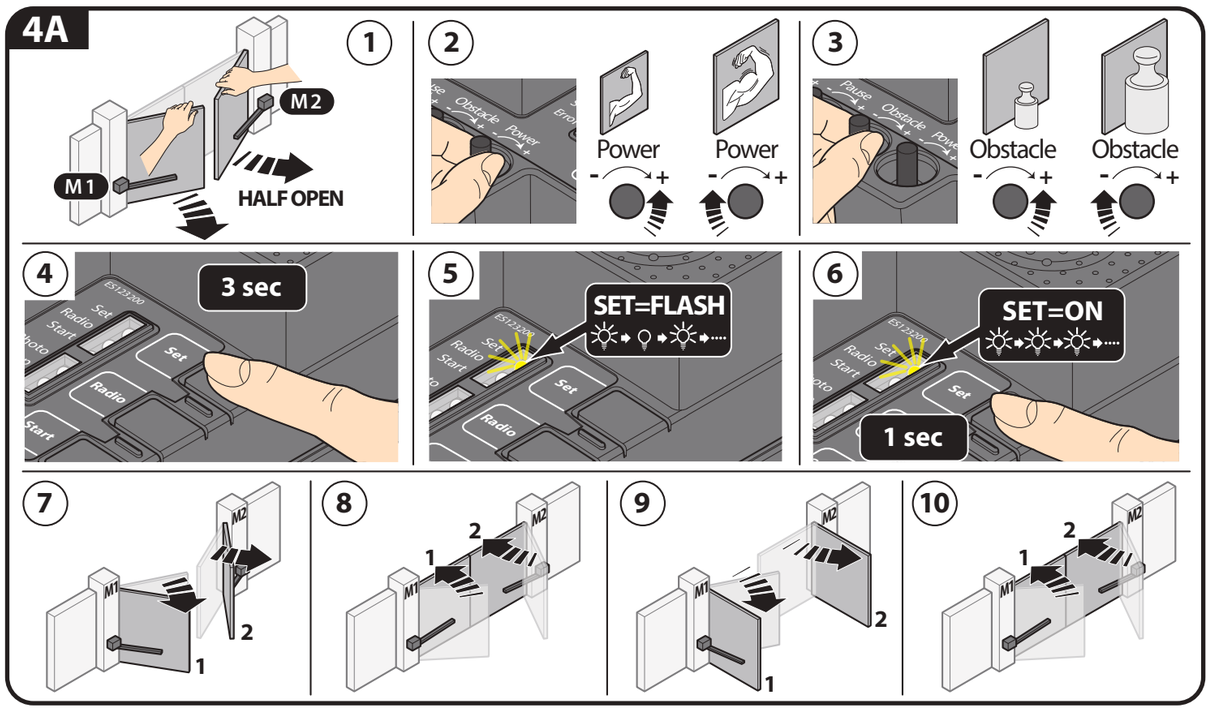

4B

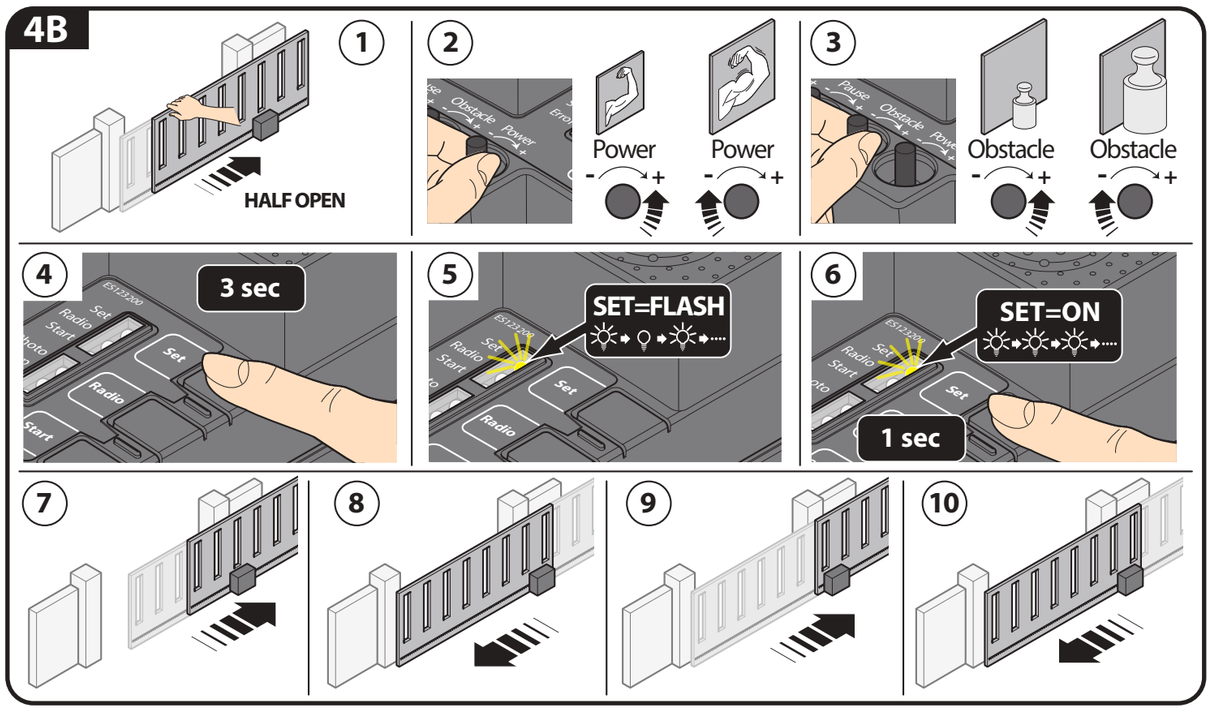

5

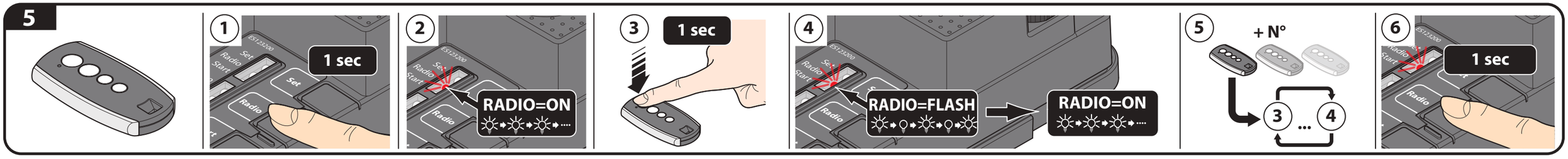

6

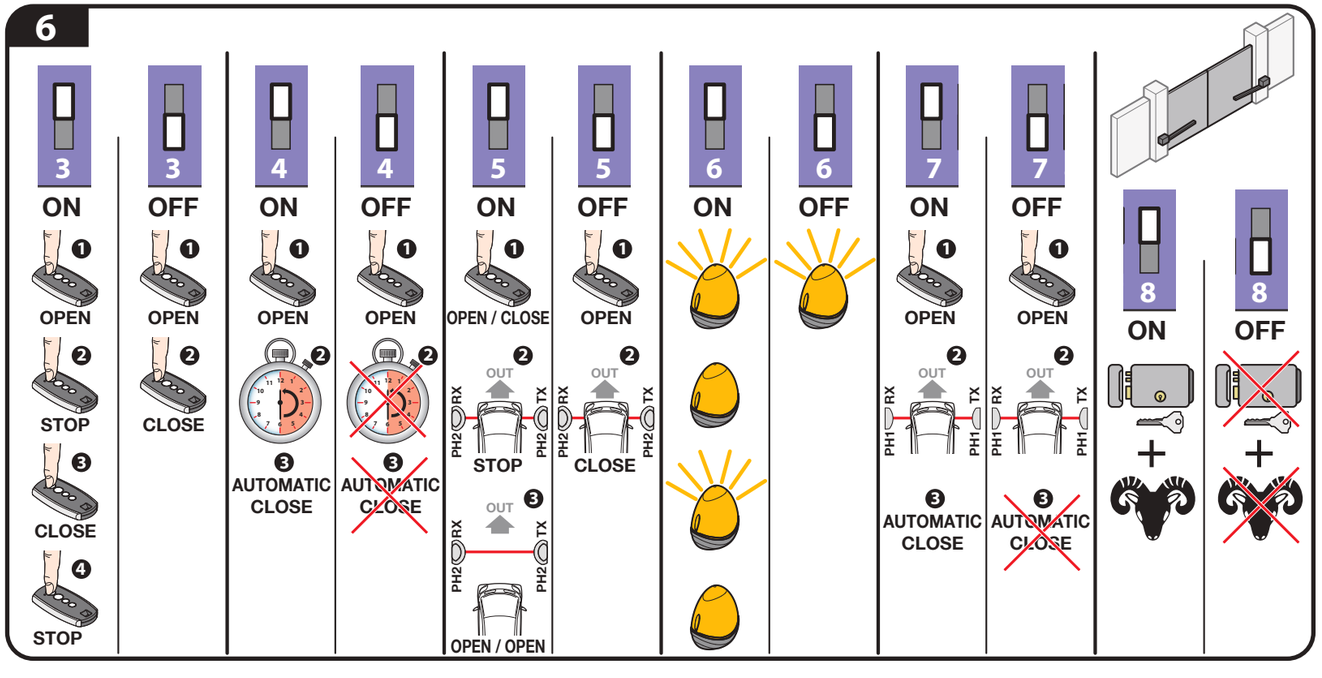

7

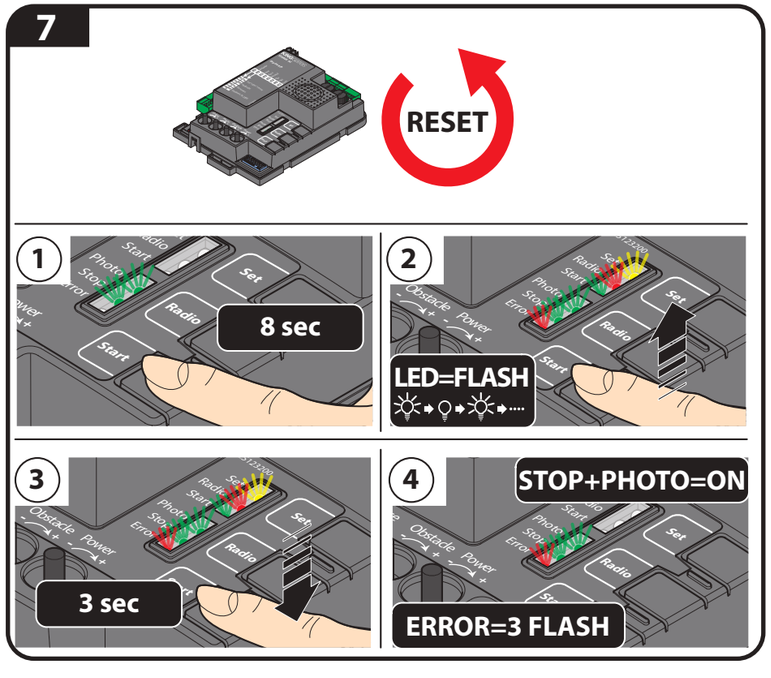

King Gates S.r.l.
Via A. Malignani, 42
33077 Sacile (PN) - ITALY
+39.0434.737082
+39.0434.786031
info@king-gates.com
www.king-gates.com

ADVANCED MANUAL